CY6611 EZ-USB HX3PD EVK

CONTENTS

PAGE	DESCRIPTION
01	TITLE, TABLE OF CONTENTS
02	HX3PD HUB BLOCK DIAGRAM
03	POWER CONNECTIONS
04	HUB PORT CONNECTIONS
05	INTERFACE CONNECTIONS
06	TYPE-C & PD CONNECTIONS
07	US & DS1 PORT
08	DS2 & DS3 PORTS
09	DS4 & DS5 PORTS
10	DS6 & DS7 PORTS
11	SYSTEM POWER INPUT
12	SYSTEM POWER 5V
13	SYSTEM POWER 3V3 & 1V2
14	NCP for US_TYPE-C
15	NCP for DS1_TYPE-C
16	UPSTREAM OCP CIRCUIT
17	DOWNSTREAM OCP CIRCUIT
18	ACCESSORIES
19	REVISION HISTORY

Drawing Numbers	
PCBA	121-60512-01
PCB	600-60512-01
FAB DRW	610-60512-01
ASSY DRW	620-60512-01
SCH DRW	630-60512-01
PCB LBL	899-60120-01

CYPRESS SEMICONDUCTOR
198 CHAMPION COURT
SAN JOSE, CA 95134
(408) 943-2600

CYPRESS SEMICONDUCTOR © 2020

SCH Title : CY6611 EZ-USB HX3PD EVK

Page Title : TITLE, TABLE OF CONTENTS

Size	Document Number	Drawn By	Approved By	Rev
A4	630-60512-01	PRVE	HITS	05

Date: Sunday, June 21, 2020 | Sheet 1 of 19

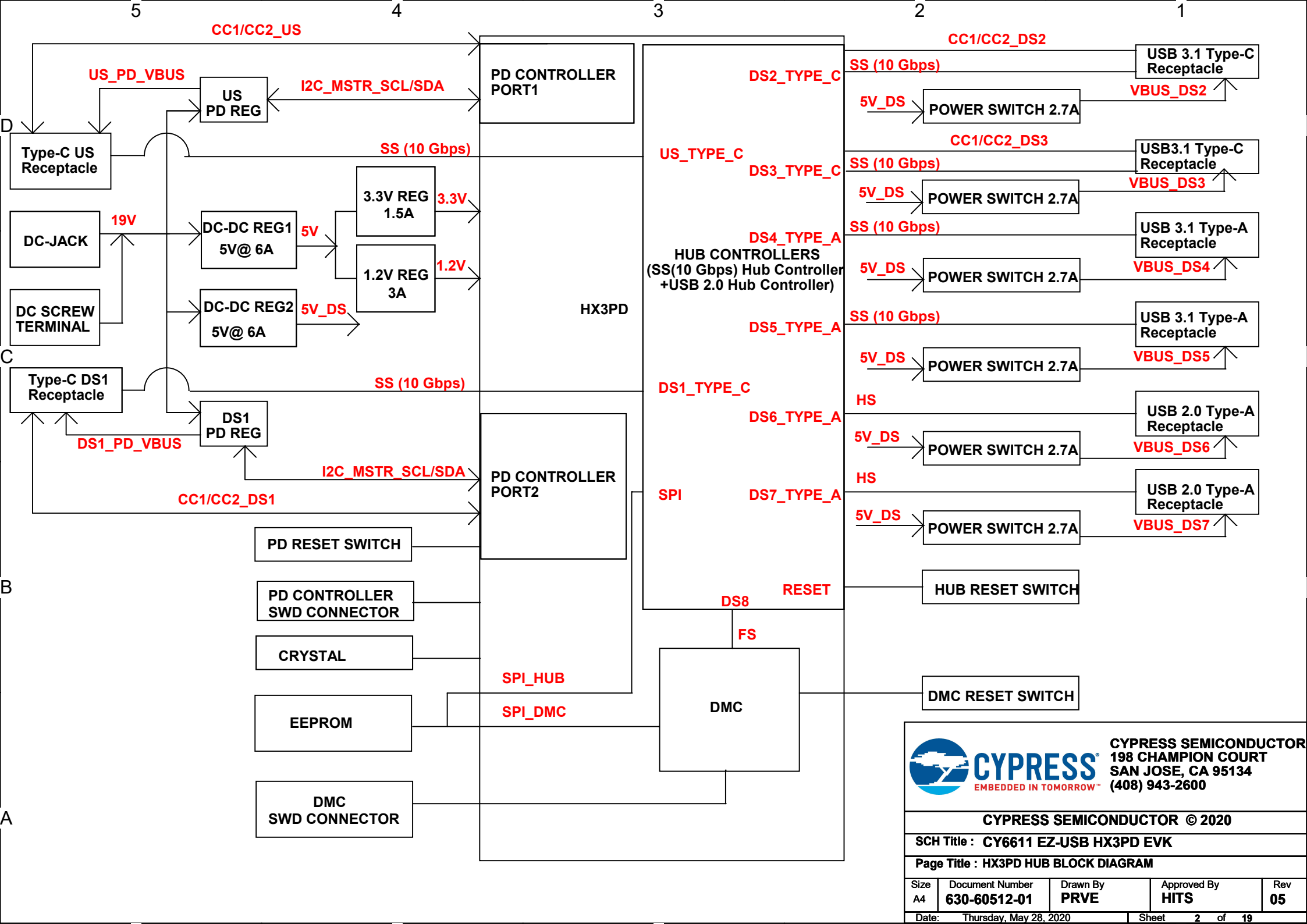

CYPRESS SEMICONDUCTOR
198 CHAMPION COURT
SAN JOSE, CA 95134
(408) 943-2600

CYPRESS SEMICONDUCTOR © 2020

SCH Title : CY6611 EZ-USB HX3PD EVK

Page Title : HX3PD HUB BLOCK DIAGRAM

Size	Document Number	Drawn By	Approved By	Rev
A4	630-60512-01	PRVE	HITS	05

Date: Thursday, May 28, 2020 Sheet 2 of 19

DECOUPLING SCHEME

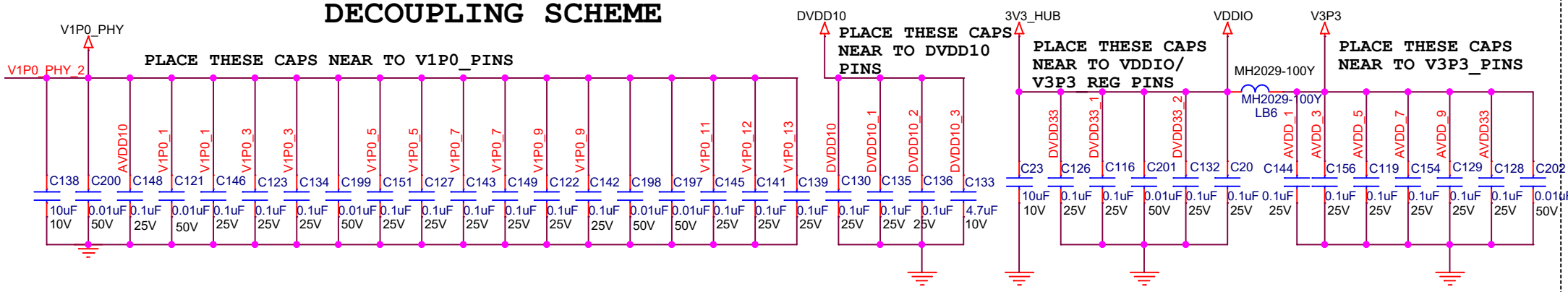

HX3PD POWER CONNECTIONS

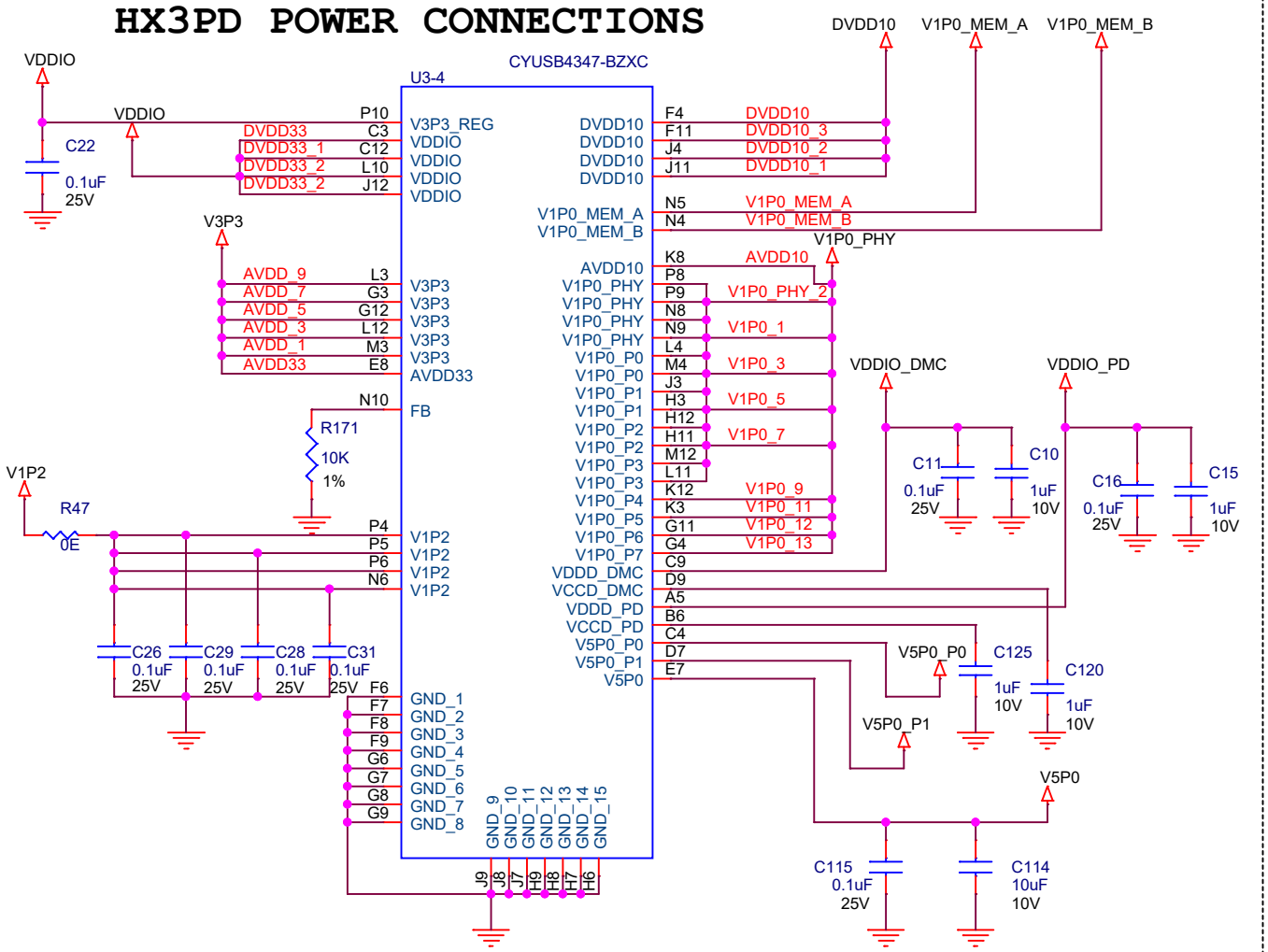

HUB & PD CONTROLLER, DMC SUPPLY

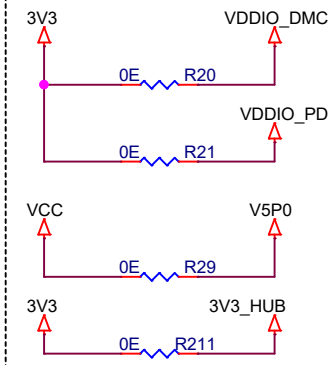

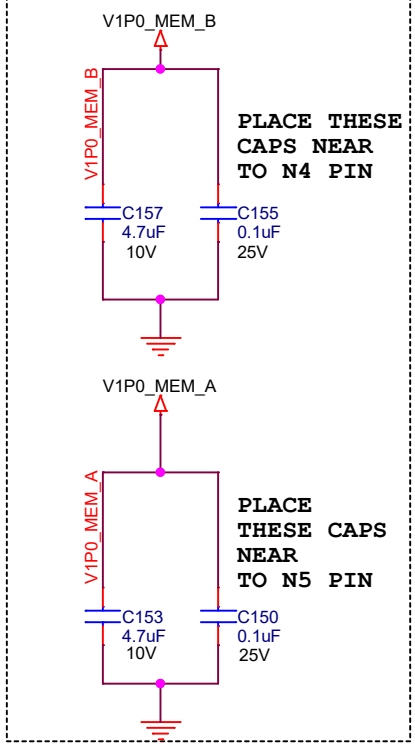

CYPRESS SEMICONDUCTOR
198 CHAMPION COURT
SAN JOSE, CA 95134
(408) 943-2600

CYPRESS SEMICONDUCTOR © 2020

SCH Title : CY6611 EZ-USB HX3PD EVK				
Page Title : POWER CONNECTIONS				
Size	Document Number	Drawn By	Approved By	Rev
A4	630-60512-01	PRVE	HITS	05
Date: Wednesday, June 17, 2020		Sheet 3 of 19		

HX3PD PORT CONNECTIONS

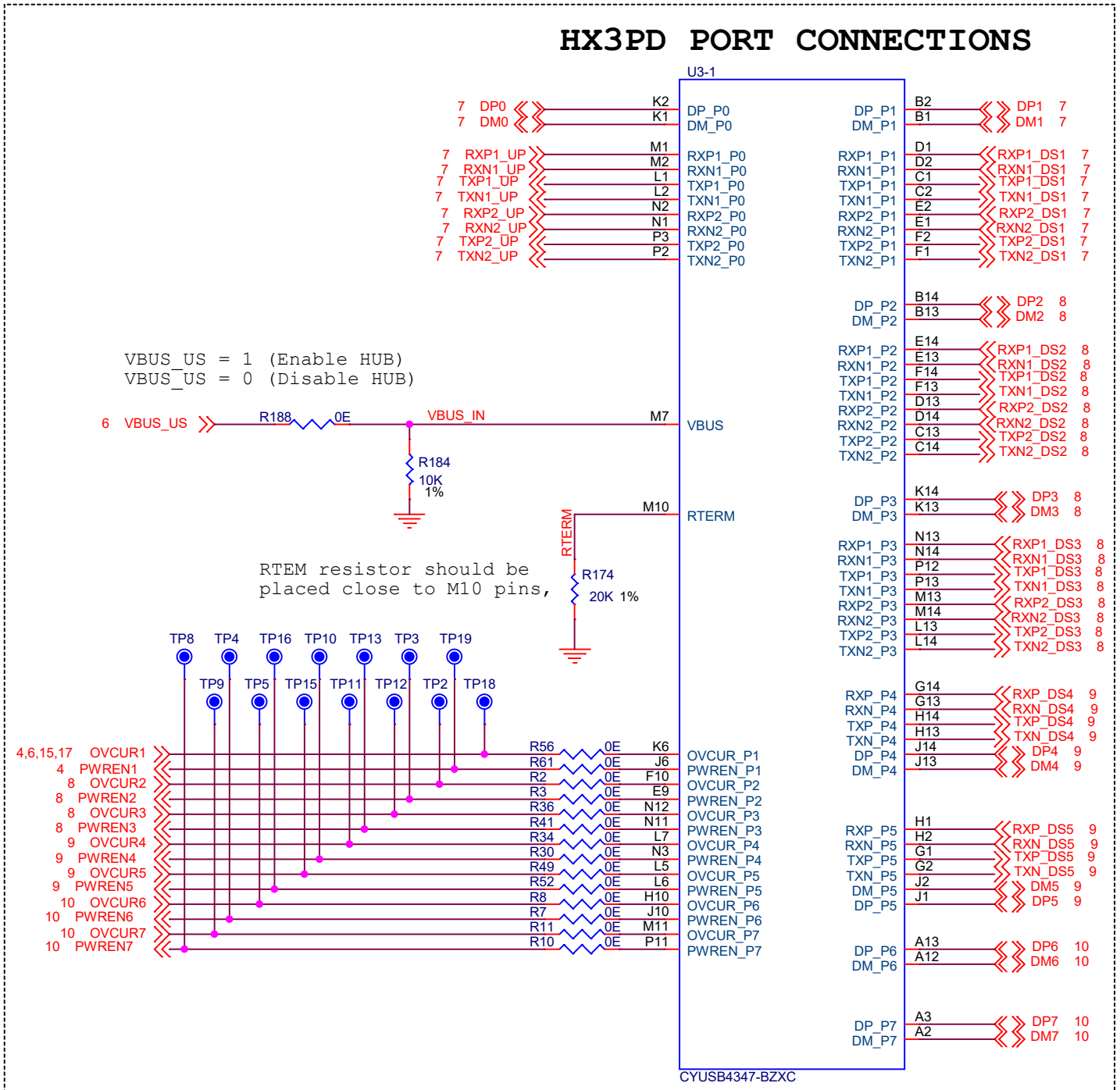

POWER ENABLE & OVERCURRENT FOR DS1 PORT ONLY

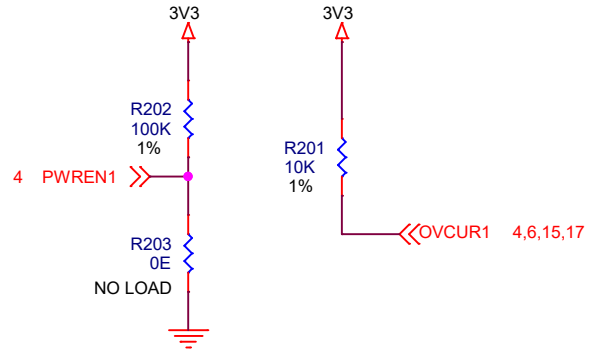

CYPRESS SEMICONDUCTOR
198 CHAMPION COURT
SAN JOSE, CA 95134
(408) 943-2600

CYPRESS SEMICONDUCTOR © 2020

SCH Title :	CY6611 EZ-USB HX3PD EVK
Page Title :	HUB PORT CONNECTIONS

Size	Document Number	Drawn By	Approved By	Rev
A4	630-60512-01	PRVE	HITS	05

Date: Wednesday, June 17, 2020 Sheet 4 of 19

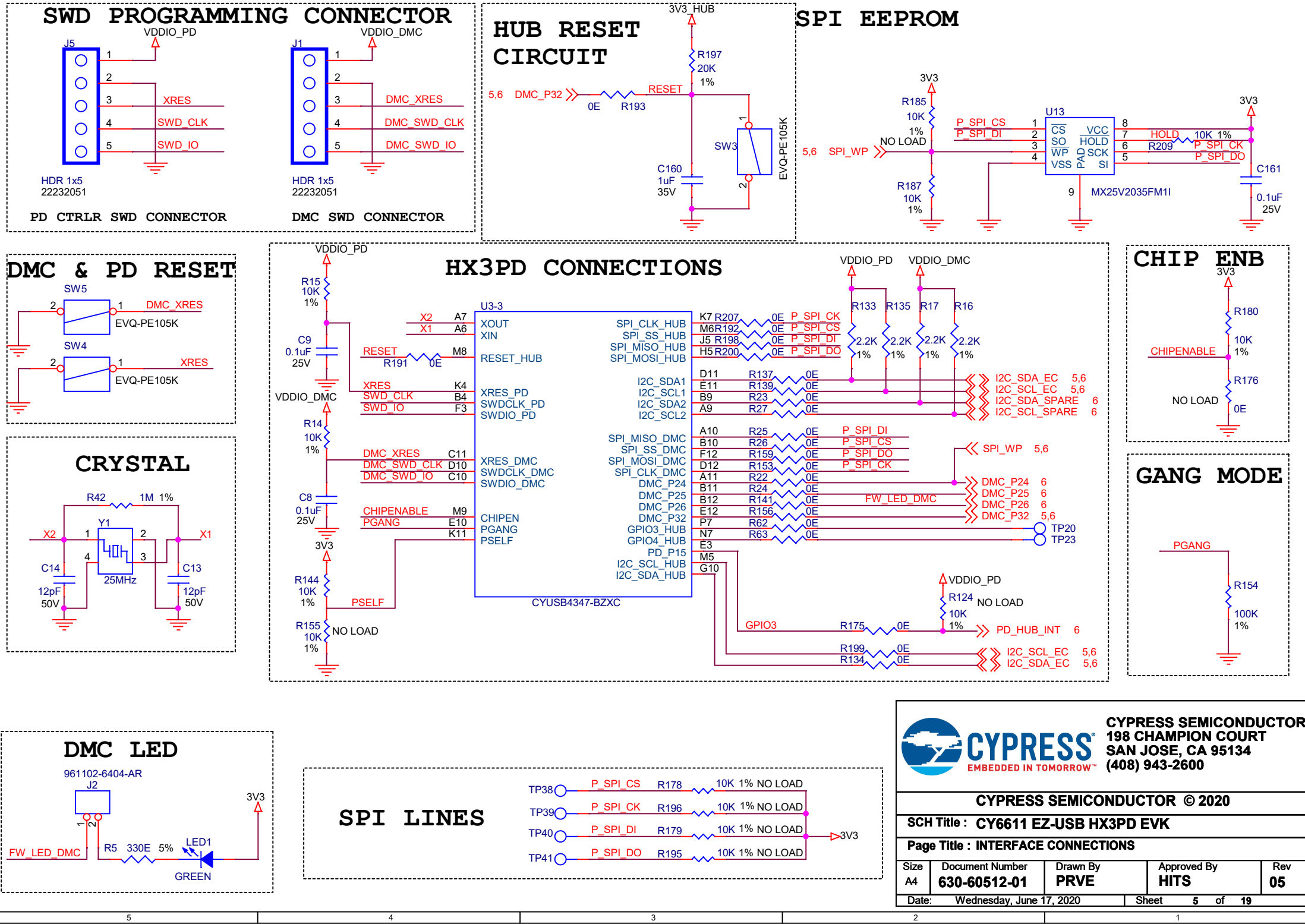
SWD PROGRAMMING CONNECTOR
VDDIO_PD
J5
1
2
3
XRES
4
SWD_CLK
5
SWD_IO
HDR 1x5
22232051
PD CTRLR SWD CONNECTOR
VDDIO_DMC
J1
1
2
3
DMC_XRES
4
DMC_SWD_CLK
5
DMC_SWD_IO
HDR 1x5
22232051
DMC SWD CONNECTOR
HUB RESET CIRCUIT
3V3_HUB
R197
20K
1%
5,6
DMC_P32
RESET
0E
R193
SW3
EVQ-PE105K
C160
1uF
35V
SPI EEPROM
3V3
R185
10K
1%
NO LOAD
5,6
SPI_WP
P_SPI_CS
P_SPI_DI
U13
CS
SO
WP
VSS
VCC
HOLD
SCK
SI
PAD
8
7
6
5
HOLD
R209
10K 1%
P_SPI_CK
P_SPI_DO
3V3
C161
0.1uF
25V
9
MX25V2035FM1I
R187
10K
1%
DMC & PD RESET
SW5
DMC_XRES
EVQ-PE105K
SW4
XRES
EVQ-PE105K
HX3PD CONNECTIONS
VDDIO_PD
R15
10K
1%
C9
0.1uF
25V
VDDIO_DMC
R14
10K
1%
C8
0.1uF
25V
3V3
R144
10K
1%
PSELF
R155
10K
1%
NO LOAD
U3-3
X2
X1
RESET
R191
0E
XRES
SWD_CLK
SWD_IO
DMC_XRES
DMC_SWD_CLK
DMC_SWD_IO
CHIPENABLE
PGANG
A7
A6
M8
K4
B4
F3
C11
D10
C10
M9
E10
K11
XOUT
XIN
RESET_HUB
XRES_PD
SWDCLK_PD
SWDIO_PD
XRES_DMC
SWDCLK_DMC
SWDIO_DMC
CHIPEN
PGANG
PSELF
CYUSB4347-BZXC
SPI_CLK_HUB
SPI_SS_HUB
SPI_MISO_HUB
SPI_MOSI_HUB
I2C_SDA1
I2C_SCL1
I2C_SDA2
I2C_SCL2
SPI_MISO_DMC
SPI_SS_DMC
SPI_MOSI_DMC
SPI_CLK_DMC
DMC_P24
DMC_P25
DMC_P26
DMC_P32
GPIO3_HUB
GPIO4_HUB
PD_P15
I2C_SCL_HUB
I2C_SDA_HUB
K7 R207 0E P_SPI_CK
M6 R192 0E P_SPI_CS
J5 R198 0E P_SPI_DI
H5 R200 0E P_SPI_DO
VDDIO_PD
VDDIO_DMC
R133
R135
R17
R16
2.2K
1%
D11 R137 0E
E11 R139 0E
B9 R23 0E
A9 R27 0E
I2C_SDA_EC 5,6
I2C_SCL_EC 5,6
I2C_SDA_SPARE 6
I2C_SCL_SPARE 6
A10 R25 0E P_SPI_DI
B10 R26 0E P_SPI_CS
F12 R159 0E P_SPI_DO
D12 R153 0E P_SPI_CK
SPI_WP 5,6
A11 R22 0E
B11 R24 0E
B12 R141 0E
E12 R156 0E
P7 R62 0E
N7 R63 0E
FW_LED_DMC
DMC_P24 6
DMC_P25 6
DMC_P26 6
DMC_P32 5,6
TP20
TP23
E3
M5
G10
VDDIO_PD
R124
NO LOAD
10K
1%
PD_HUB_INT 6
GPIO3
R175 0E
R199 0E
R134 0E
I2C_SCL_EC 5,6
I2C_SDA_EC 5,6
CHIP ENB
3V3
R180
10K
1%
CHIPENABLE
R176
NO LOAD
0E
GANG MODE
PGANG
R154
100K
1%
CRYSTAL
R42
1M 1%
Y1
X2
X1
1
2
3
4
25MHz
C14
12pF
50V
C13
12pF
50V
DMC LED
961102-6404-AR
J2
1
2
3V3
FW_LED_DMC
R5
330E
5%
LED1
GREEN
SPI LINES
TP38
P_SPI_CS
R178
10K 1% NO LOAD
TP39
P_SPI_CK
R196
10K 1% NO LOAD
TP40
P_SPI_DI
R179
10K 1% NO LOAD
TP41
P_SPI_DO
R195
10K 1% NO LOAD
3V3
CYPRESS SEMICONDUCTOR
198 CHAMPION COURT
SAN JOSE, CA 95134
(408) 943-2600
CYPRESS SEMICONDUCTOR © 2020
SCH Title : CY6611 EZ-USB HX3PD EVK
Page Title : INTERFACE CONNECTIONS
Size A4
Document Number 630-60512-01
Drawn By PRVE
Approved By HITS
Rev 05
Date: Wednesday, June 17, 2020
Sheet 5 of 19

HX3PD CONNECTIONS

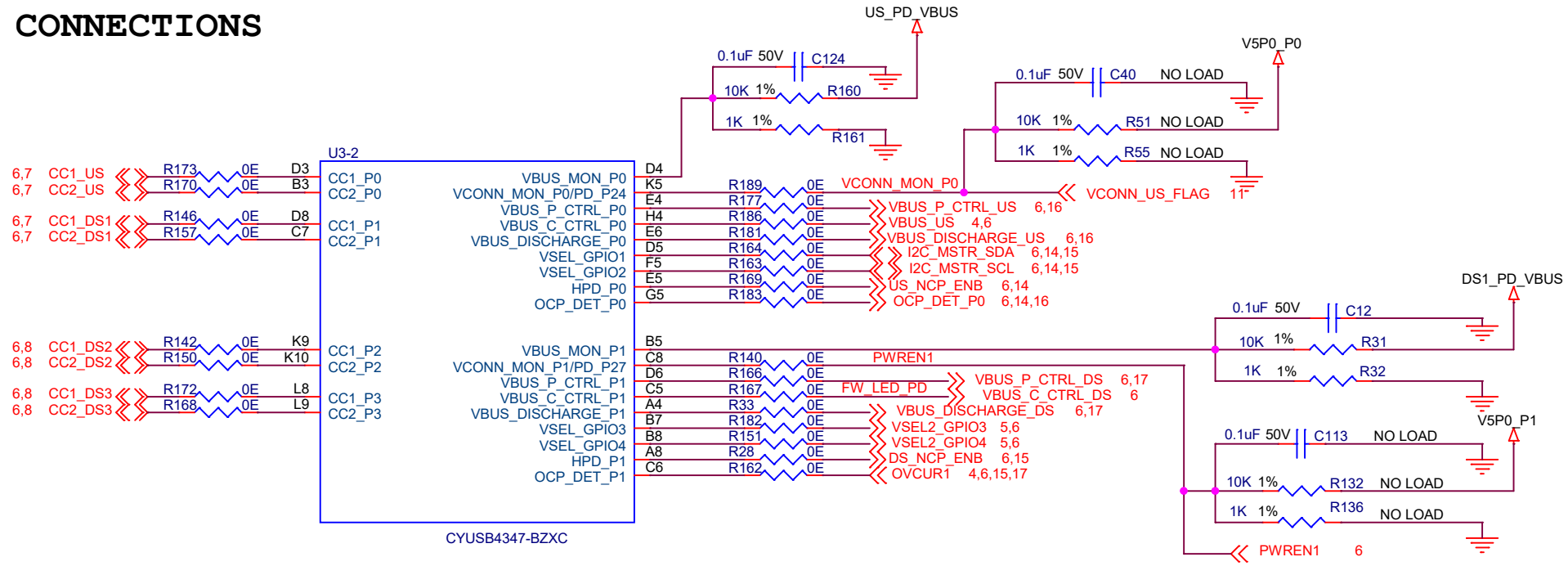

I/O CONNECTORS

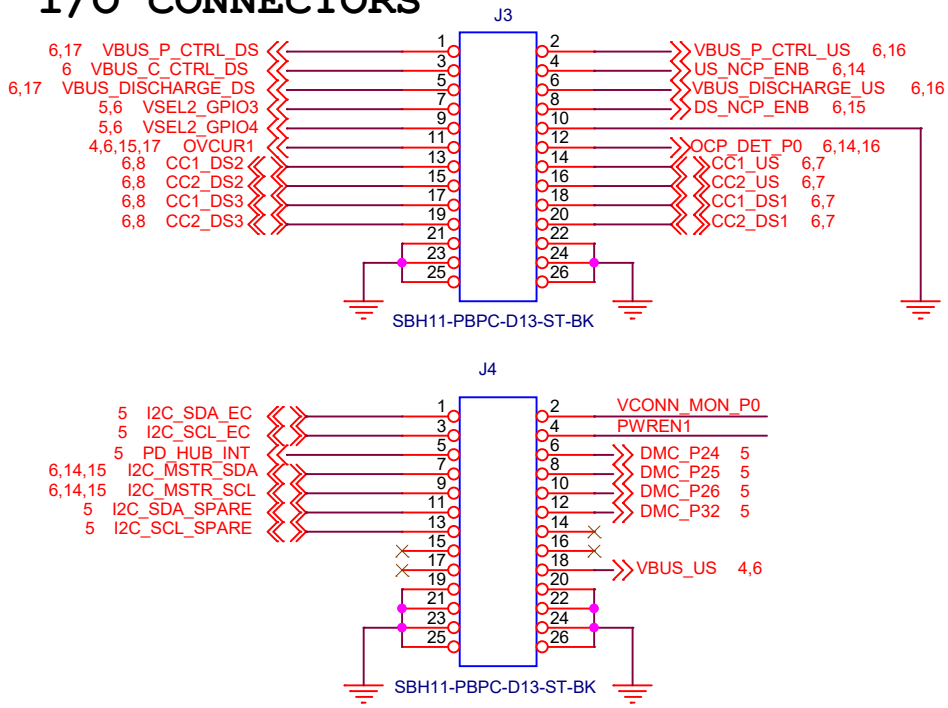

PD CTRLR LED

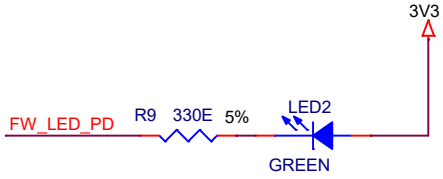

I2C PULL UP's

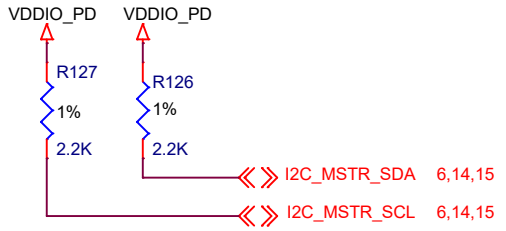

CYPRESS SEMICONDUCTOR
198 CHAMPION COURT
SAN JOSE, CA 95134
(408) 943-2600

CYPRESS SEMICONDUCTOR © 2020

SCH Title : CY6611 EZ-USB HX3PD EVK

Page Title : TYPE-C & PD CONNECTIONS

Size	Document Number	Drawn By	Approved By	Rev
A4	630-60512-01	PRVE	HITS	05

Date: Wednesday, June 17, 2020 Sheet 6 of 19

US: TYPE-C + PD PORT

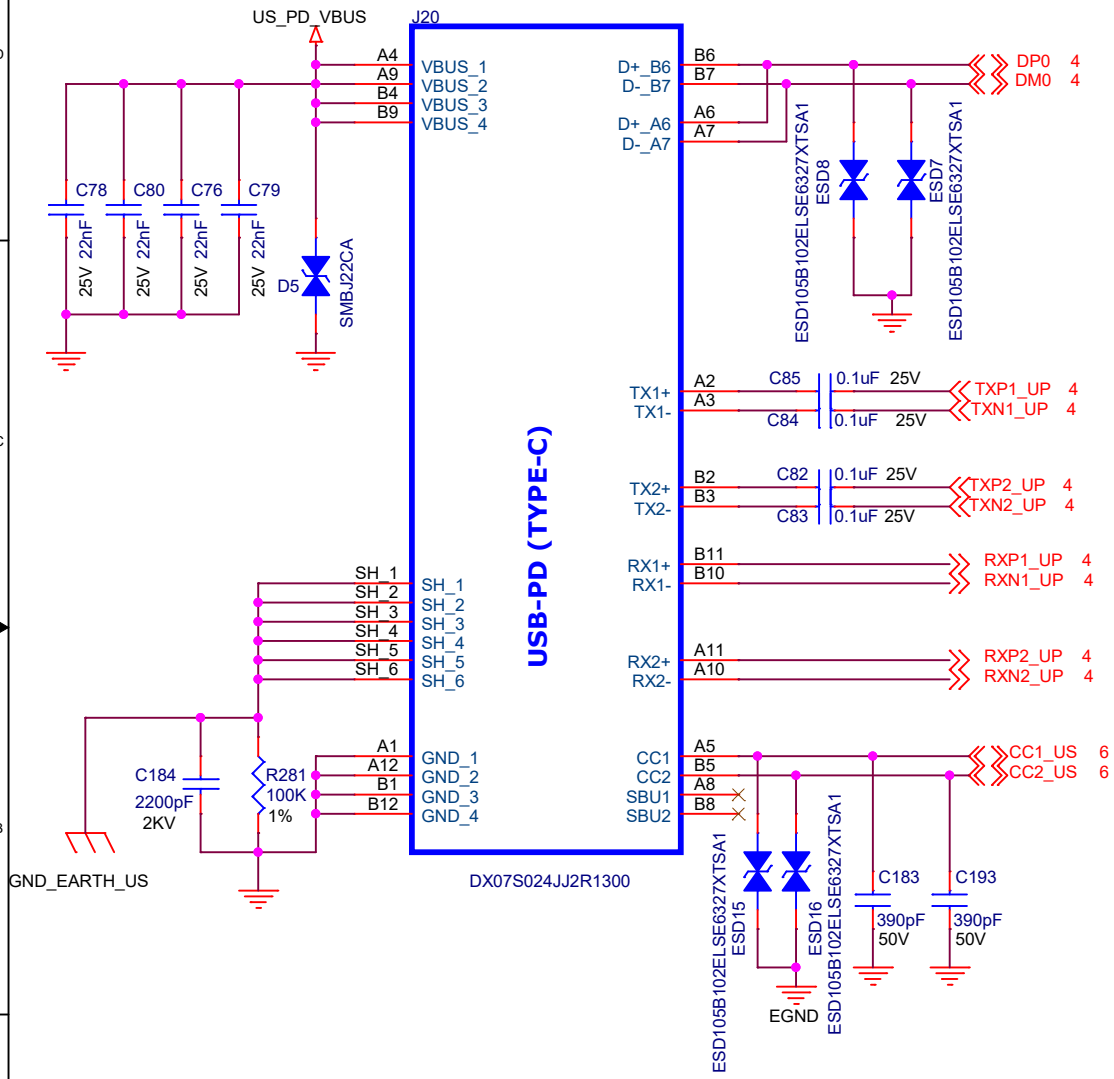

DS1: TYPE-C + PD PORT

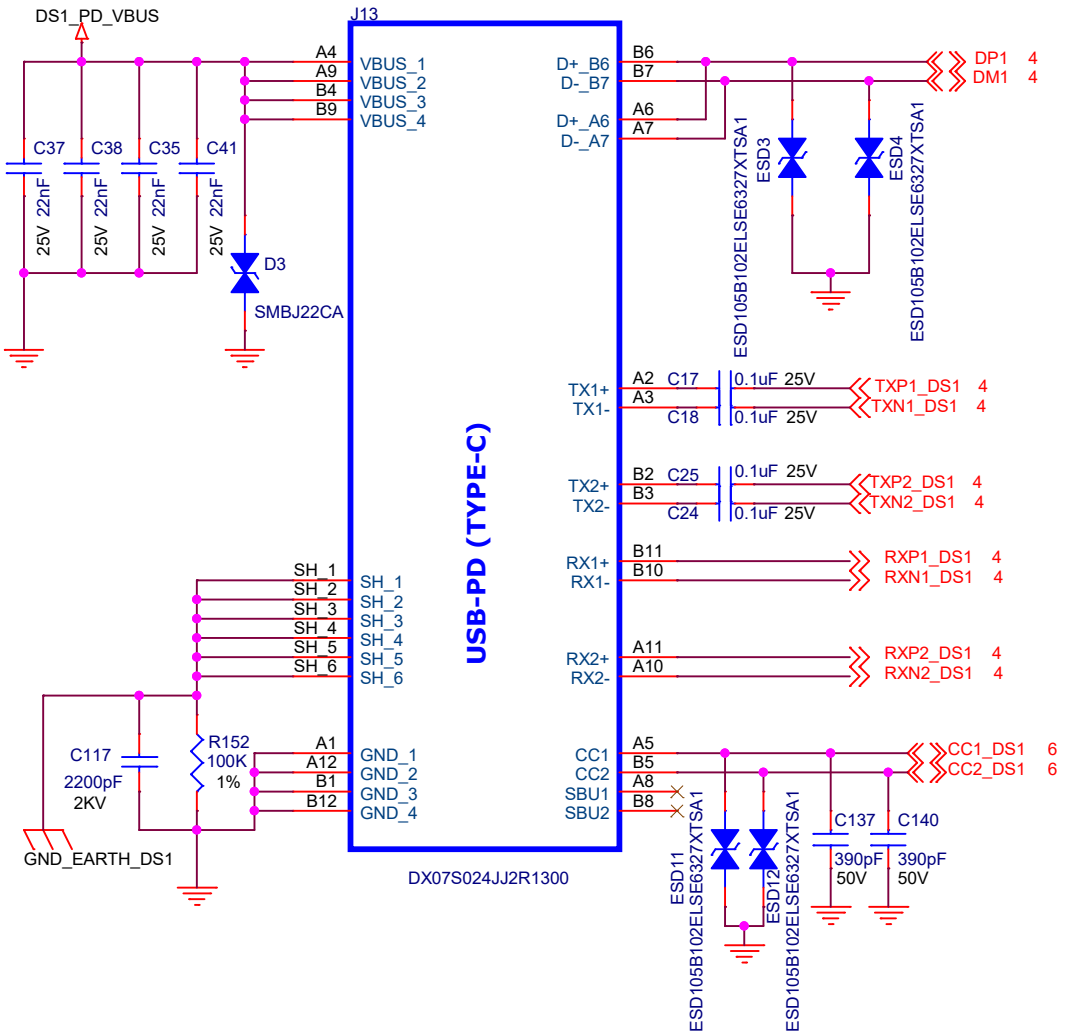

CYPRESS SEMICONDUCTOR
198 CHAMPION COURT
SAN JOSE, CA 95134
(408) 943-2600

CYPRESS SEMICONDUCTOR © 2020

SCH Title :	CY6611 EZ-USB HX3PD EVK
Page Title :	US & DS1 PORTS

Size	Document Number	Drawn By	Approved By	Rev
A4	630-60512-01	PRVE	HITS	05

Date: Sunday, June 21, 2020 Sheet 7 of 19

DS2: TYPE-C ONLY PORT

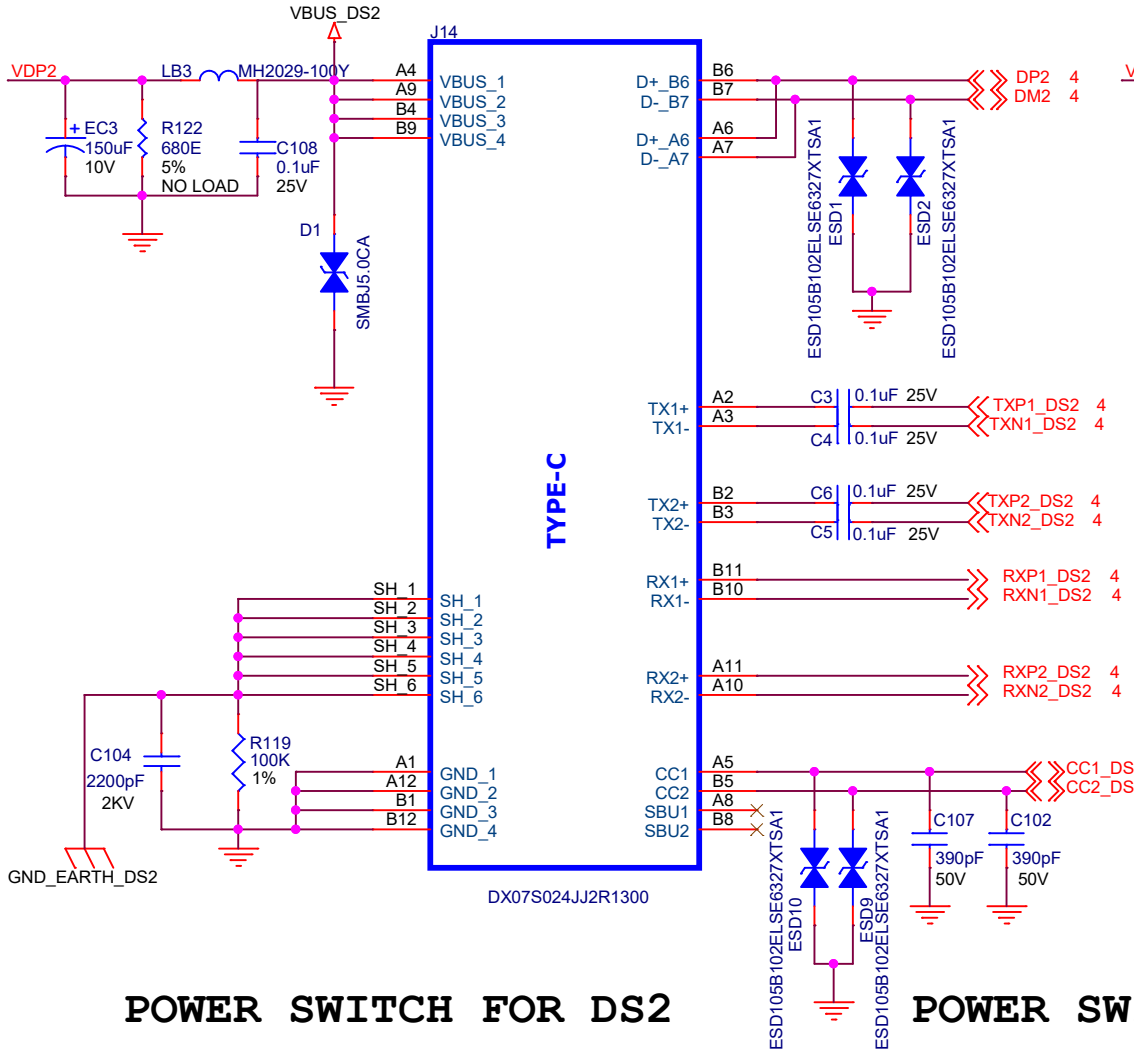

DS3: TYPE-C ONLY PORT

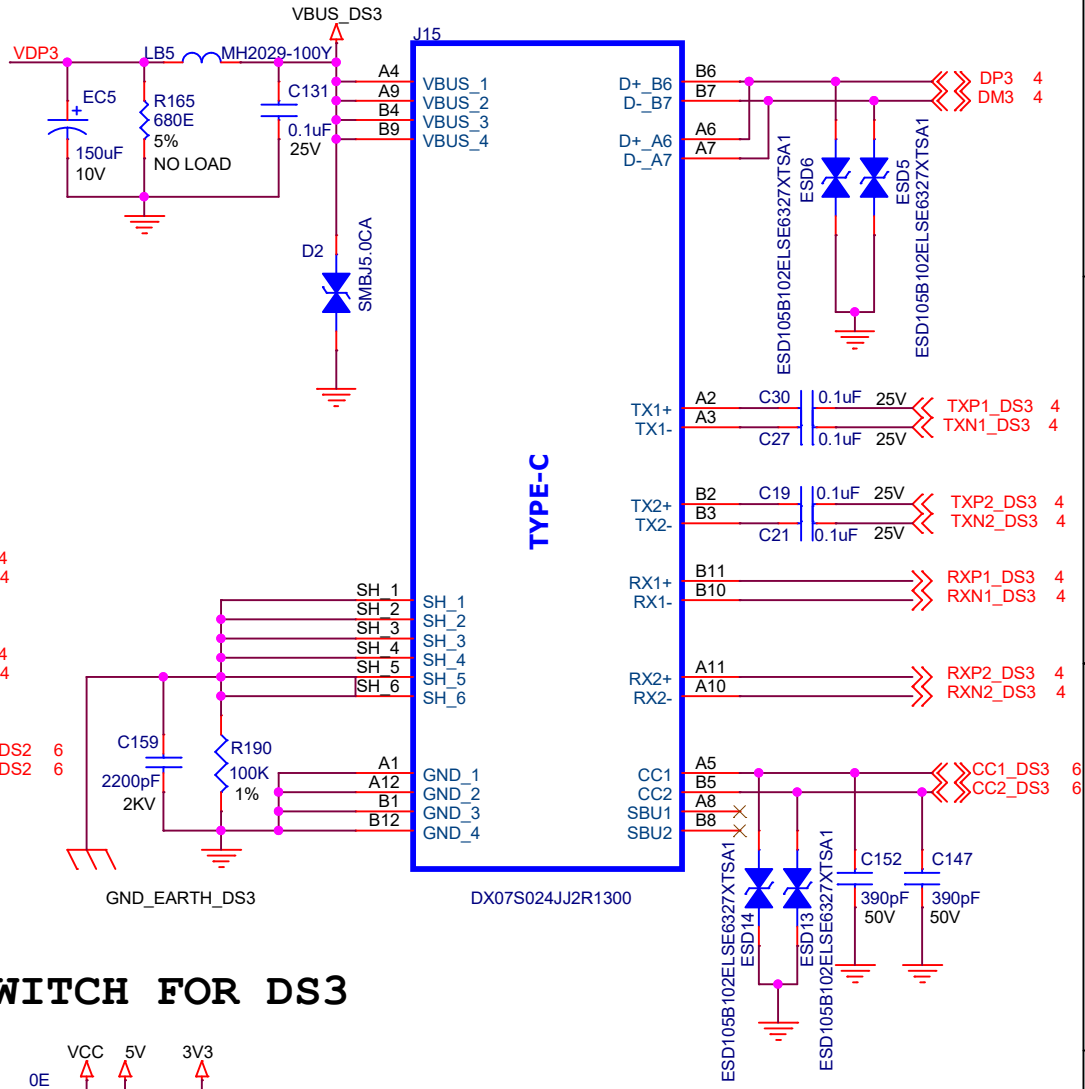

POWER SWITCH FOR DS2

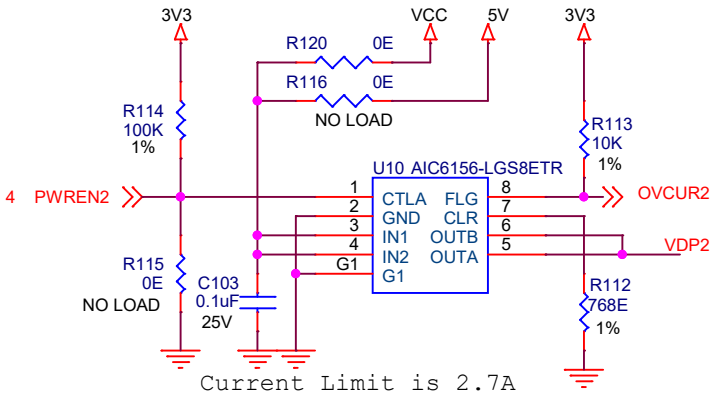

POWER SWITCH FOR DS3

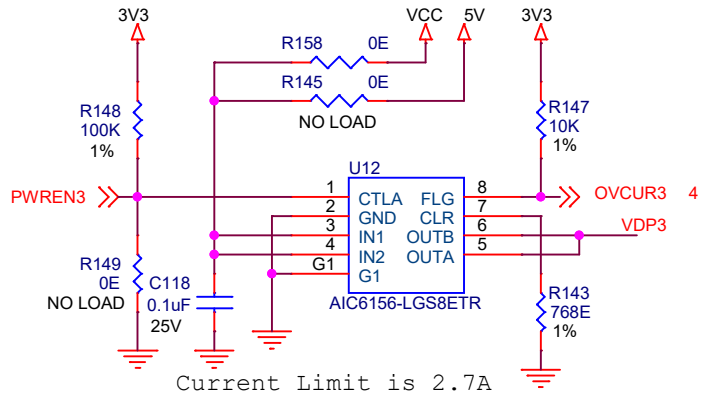

CYPRESS SEMICONDUCTOR
198 CHAMPION COURT
SAN JOSE, CA 95134
(408) 943-2600

CYPRESS SEMICONDUCTOR © 2020

SCH Title : CY6611 EZ-USB HX3PD EVK				
Page Title : DS2 & DS3 PORTS				
Size: A4	Document Number: 630-60512-01	Drawn By: PRVE	Approved By: HITS	Rev: 05
Date: Sunday, June 21, 2020		Sheet 8 of 19		

POWER SWITCH FOR DS4

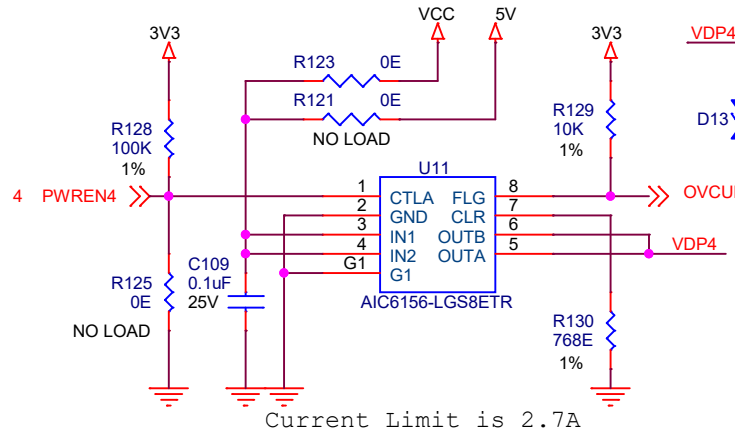

DS4: USB3.1 GEN2 TYPE-A PORT

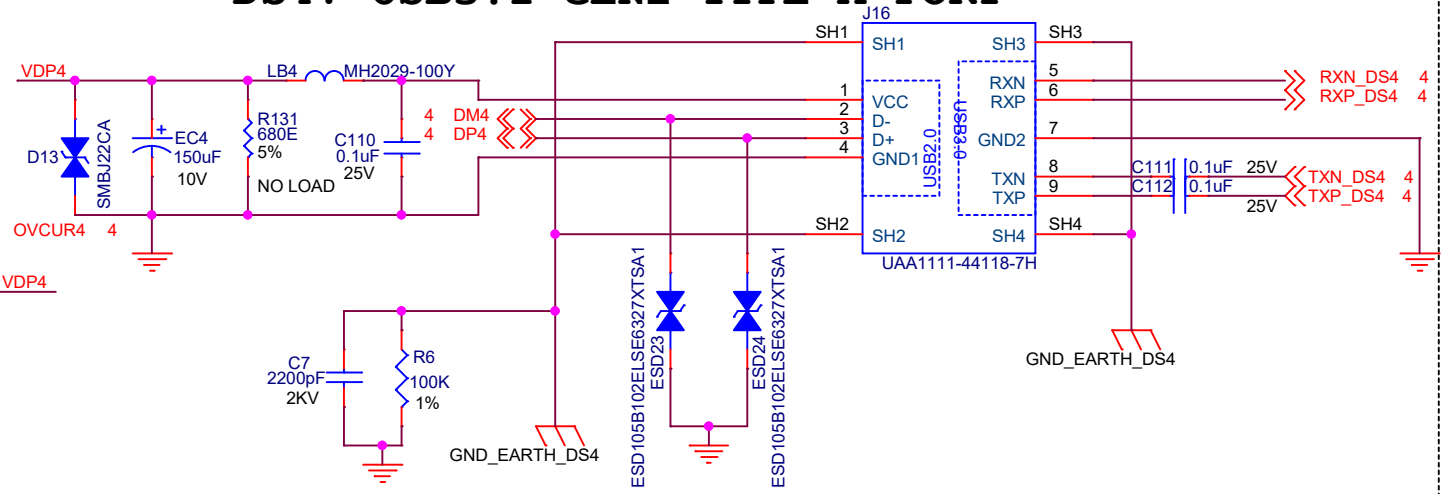

POWER SWITCH FOR DS5

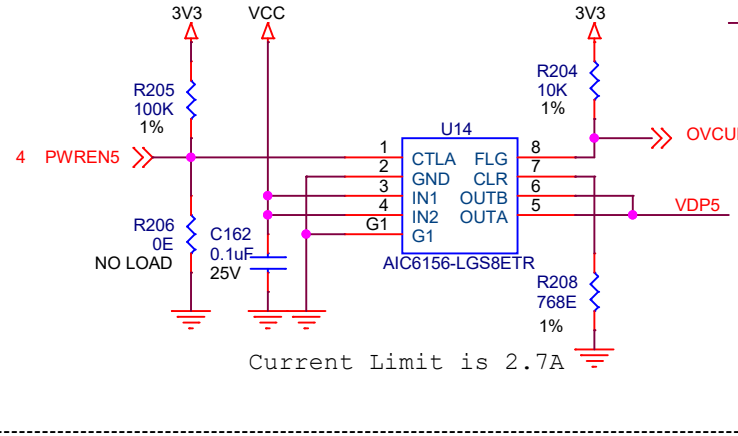

DS5: USB3.1 GEN2 TYPE-A PORT

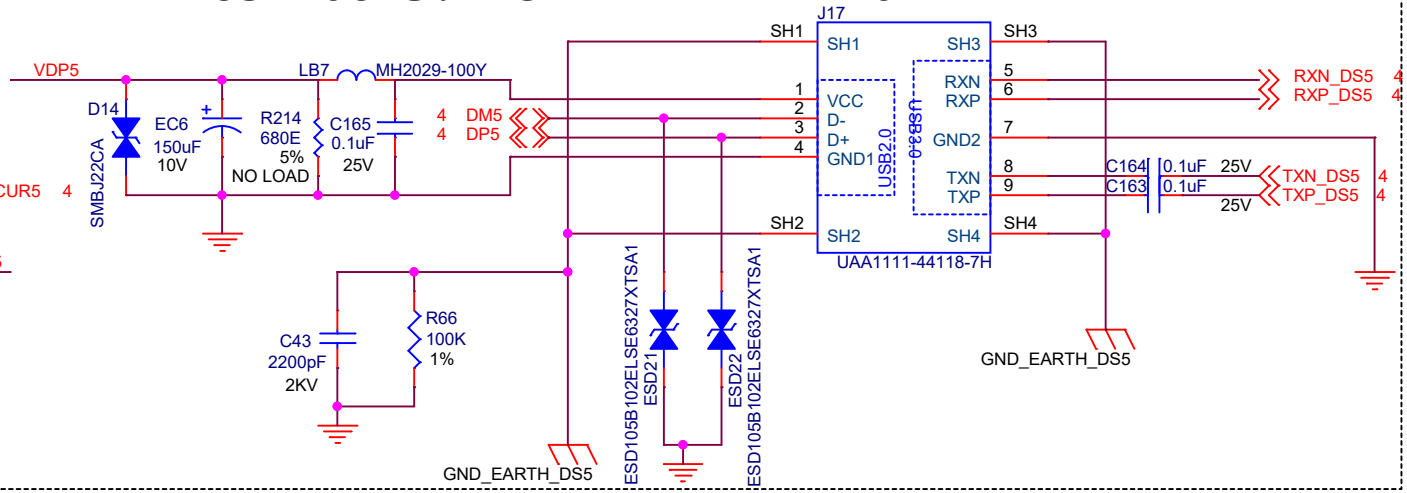

CYPRESS SEMICONDUCTOR
198 CHAMPION COURT
SAN JOSE, CA 95134
(408) 943-2600

CYPRESS SEMICONDUCTOR © 2020

SCH Title : CY6611 EZ-USB HX3PD EVK				
Page Title : DS4 & DS5 PORTS				
Size	Document Number	Drawn By	Approved By	Rev
A4	630-60512-01	PRVE	HITS	05
Date: Sunday, June 21, 2020		Sheet 9 of 19		

POWER SWITCH FOR DS6

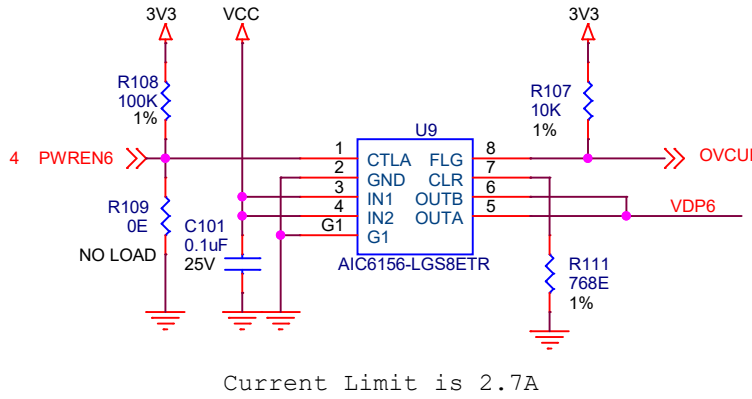

DS6: USB2.0 TYPE-A PORT

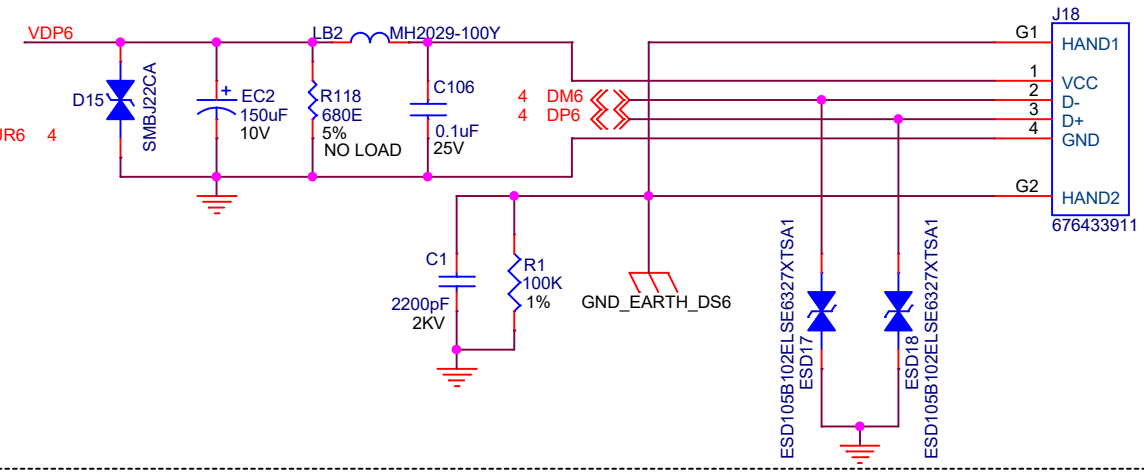

POWER SWITCH FOR DS7

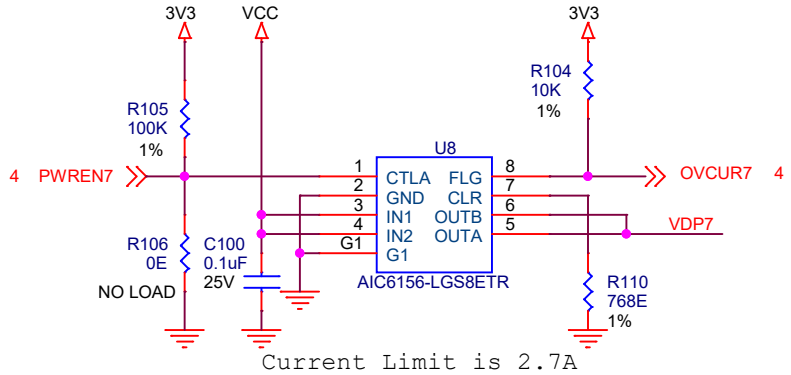

DS7: USB 2.0 TYPE-A PORT

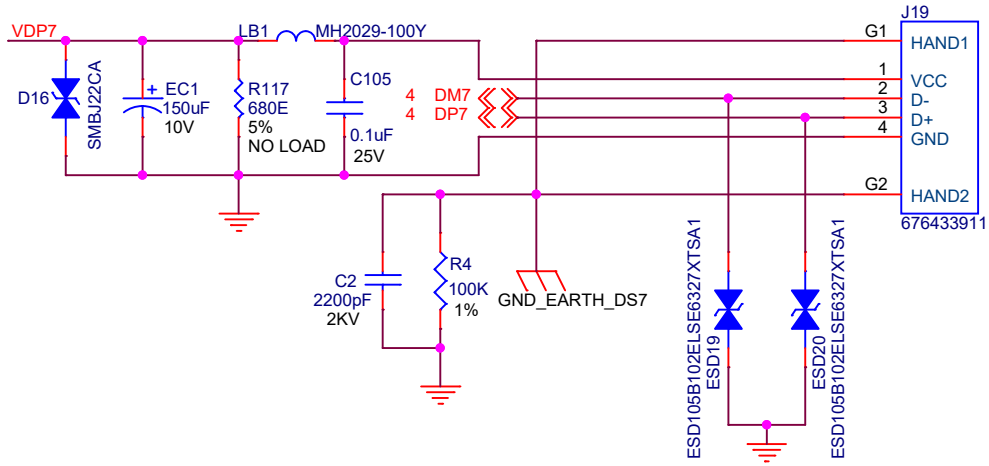

CYPRESS SEMICONDUCTOR
198 CHAMPION COURT
SAN JOSE, CA 95134
(408) 943-2600

CYPRESS SEMICONDUCTOR © 2020

SCH Title : CY6611 EZ-USB HX3PD EVK

Page Title : DS6 & DS7 PORTS

Size	Document Number	Drawn By	Approved By	Rev
A4	630-60512-01	PRVE	HITS	05

Date: Sunday, June 21, 2020 Sheet 10 of 19

DC INPUT 19V@5A — INPUT POWER & PROTECTION

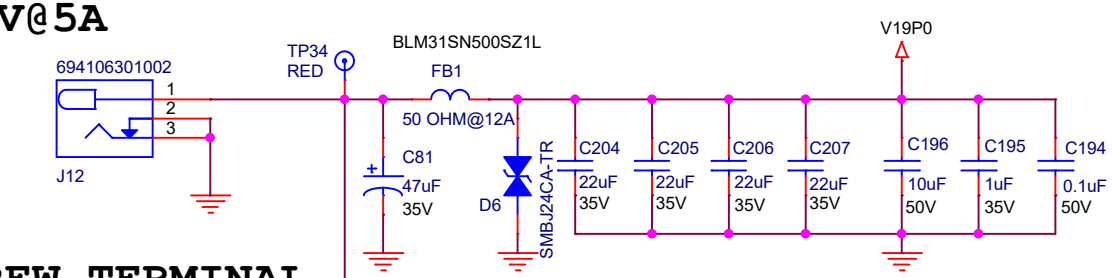

SCREW TERMINAL

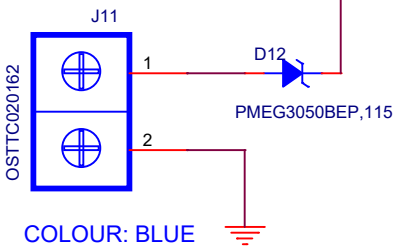

VCONN POWER SWITCH -DS1

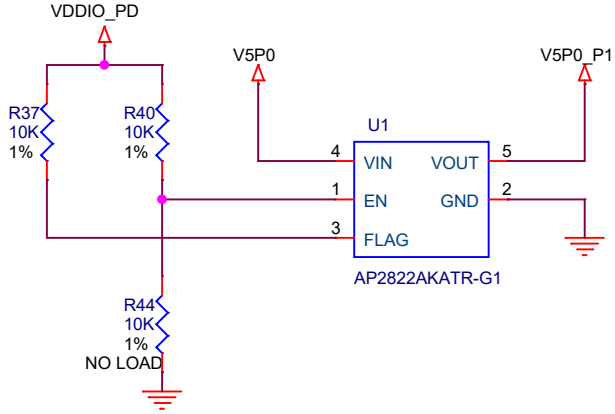

VCONN POWER SWITCH -US

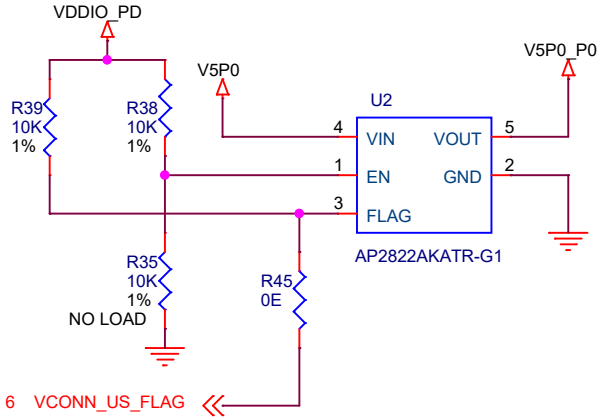

GND TEST POINTS

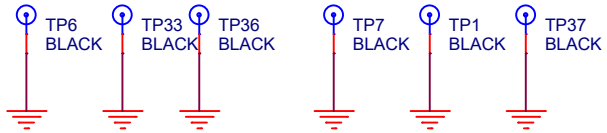

CYPRESS SEMICONDUCTOR
198 CHAMPION COURT
SAN JOSE, CA 95134
(408) 943-2600

CYPRESS SEMICONDUCTOR © 2020

SCH Title : CY6611 EZ-USB HX3PD EVK				
Page Title : SYSTEM POWER INPUT				
Size: A4	Document Number: 630-60512-01	Drawn By: PRVE	Approved By: HITS	Rev: 05
Date: Monday, May 18, 2020		Sheet 11 of 19		

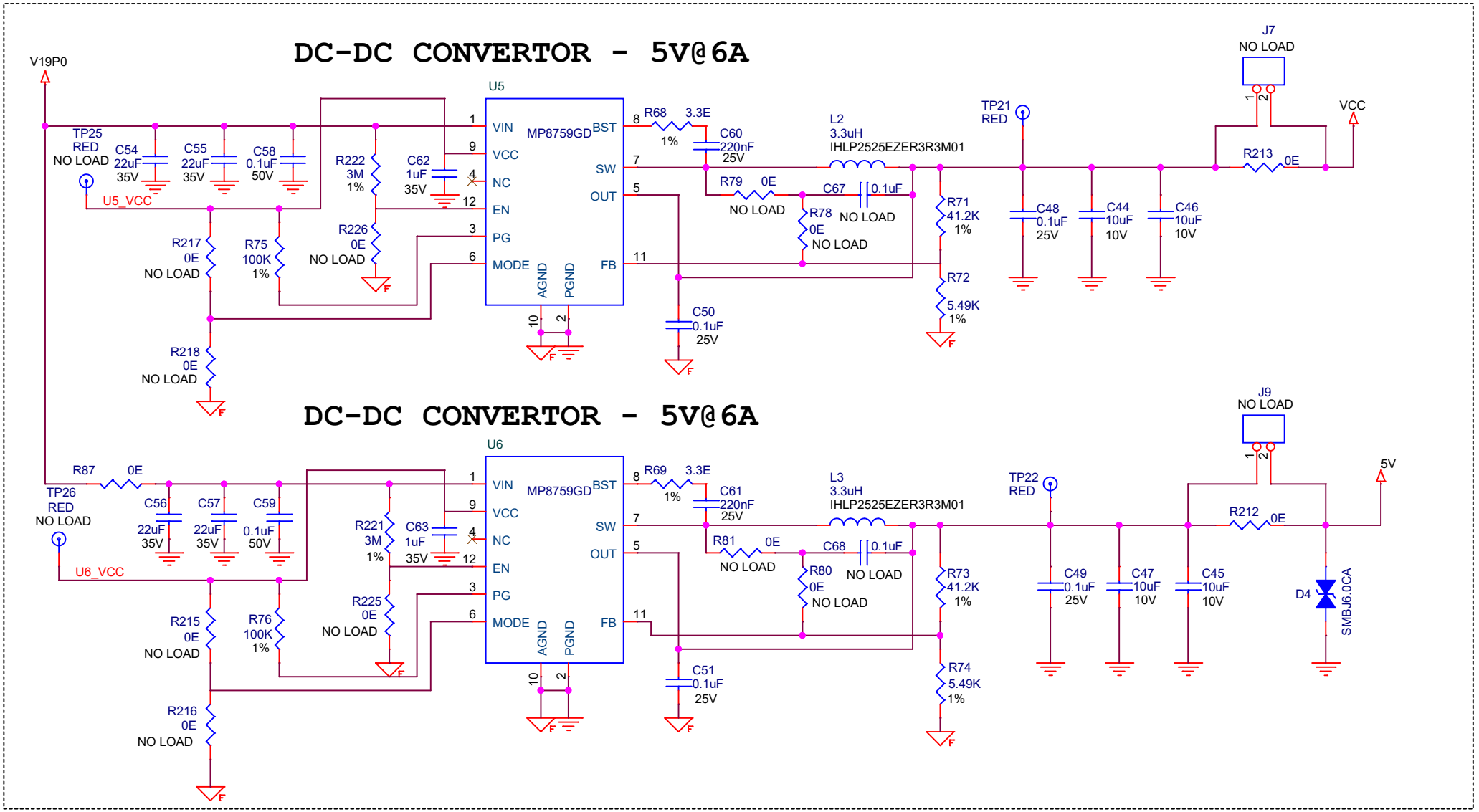

CYPRESS SEMICONDUCTOR
198 CHAMPION COURT
SAN JOSE, CA 95134
(408) 943-2600

CYPRESS SEMICONDUCTOR © 2020

SCH Title : CY6611 EZ-USB HX3PD EVK

Page Title : SYSTEM POWER 5V

Size	Document Number	Drawn By	Approved By	Rev
A4	630-60512-01	PRVE	HITS	05

Date: Monday, May 18, 2020 Sheet 12 of 19

STEP DOWN REGULATOR - 3.3V@1.5A

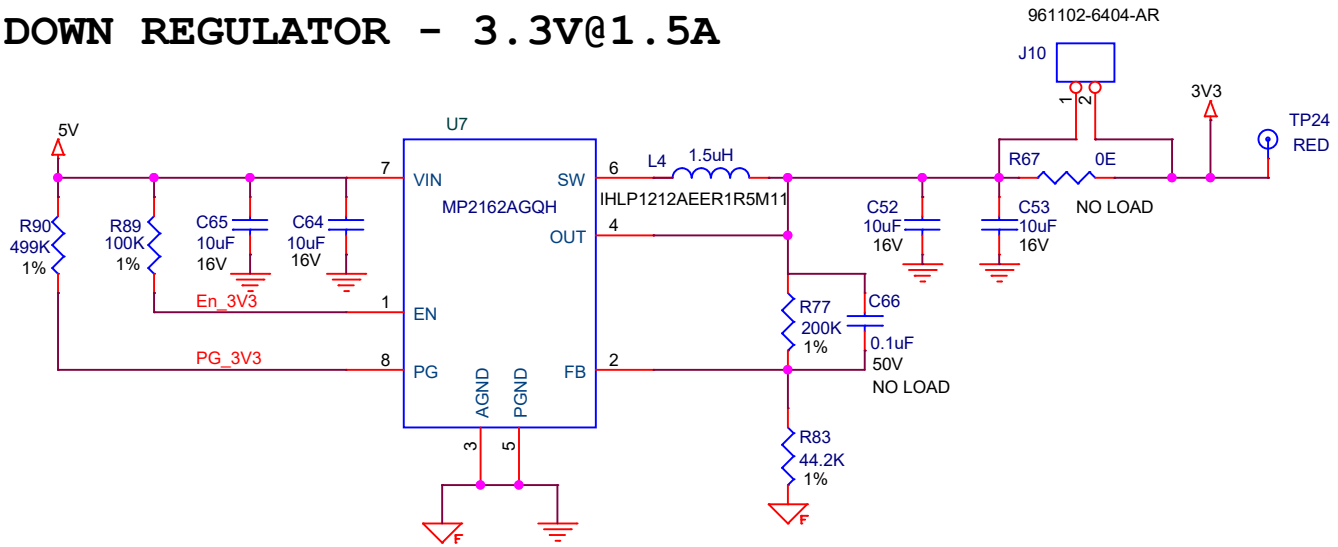

STEP DOWN REGULATOR - 1.2V@3A

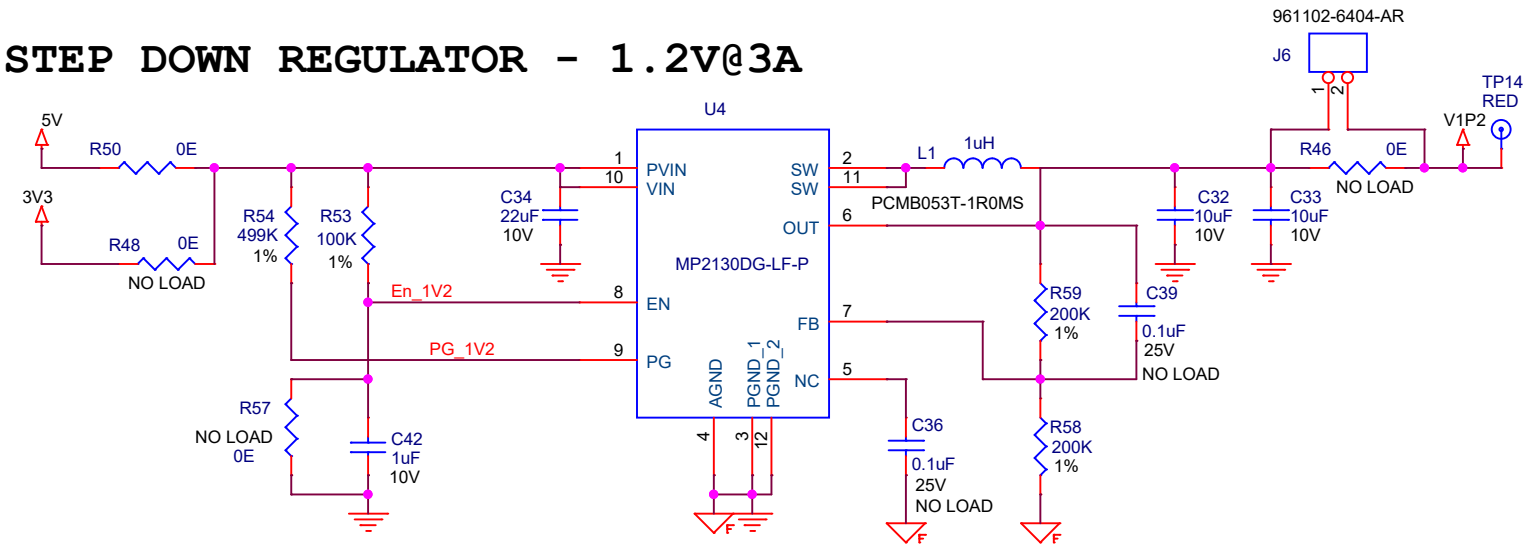

POWER LED's

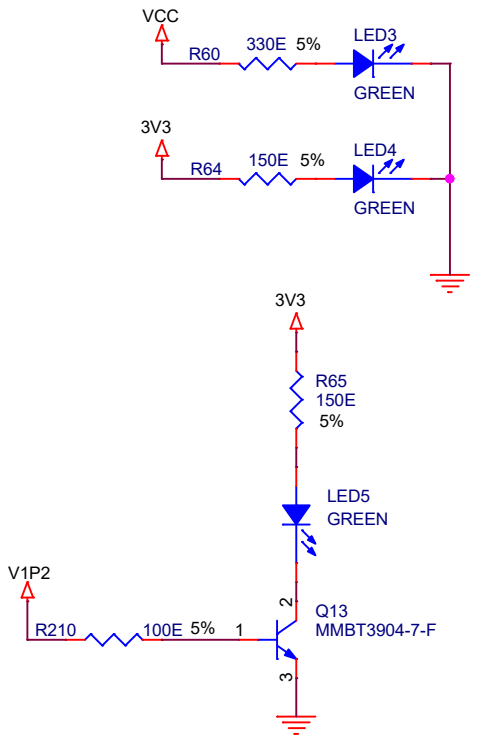

CYPRESS SEMICONDUCTOR
198 CHAMPION COURT
SAN JOSE, CA 95134
(408) 943-2600

CYPRESS SEMICONDUCTOR © 2020

SCH Title : CY6611 EZ-USB HX3PD EVK

Page Title : SYSTEM POWER 3V3 & 1V2

Size	Document Number	Drawn By	Approved By	Rev
A4	630-60512-01	PRVE	HITS	05

Date: Monday, May 18, 2020 Sheet 13 of 19

PD REGULATOR FOR US PORT

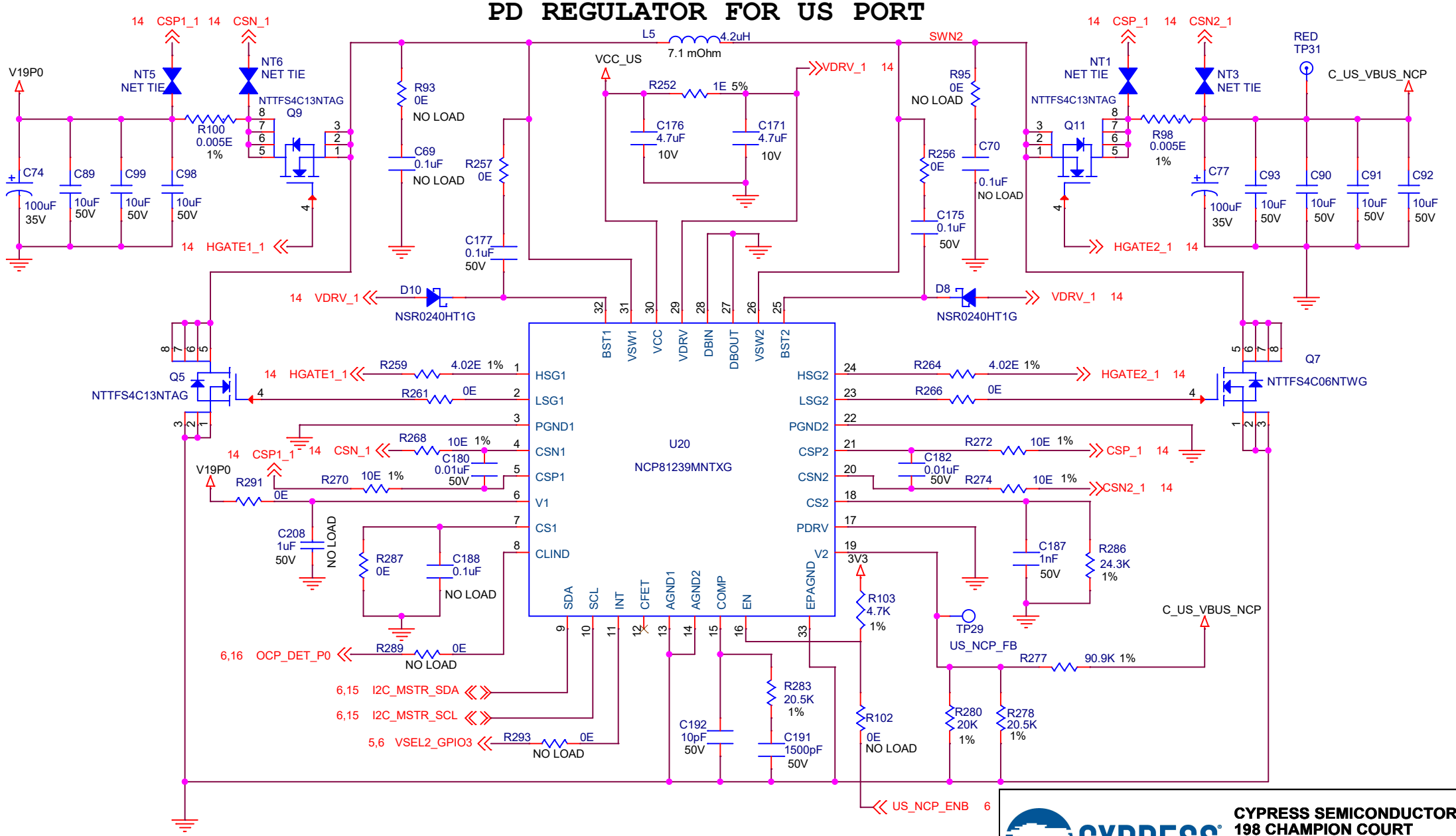

CYPRESS SEMICONDUCTOR
198 CHAMPION COURT
SAN JOSE, CA 95134
(408) 943-2600

CYPRESS SEMICONDUCTOR © 2020

SCH Title :	CY6611 EZ-USB HX3PD EVK
Page Title :	NCP for US_TYPE-C

Size	Document Number	Drawn By	Approved By	Rev
A4	630-60512-01	PRVE	HITS	05

Date: Monday, June 01, 2020 Sheet 14 of 19

PD REGULATOR FOR DS1 PORT

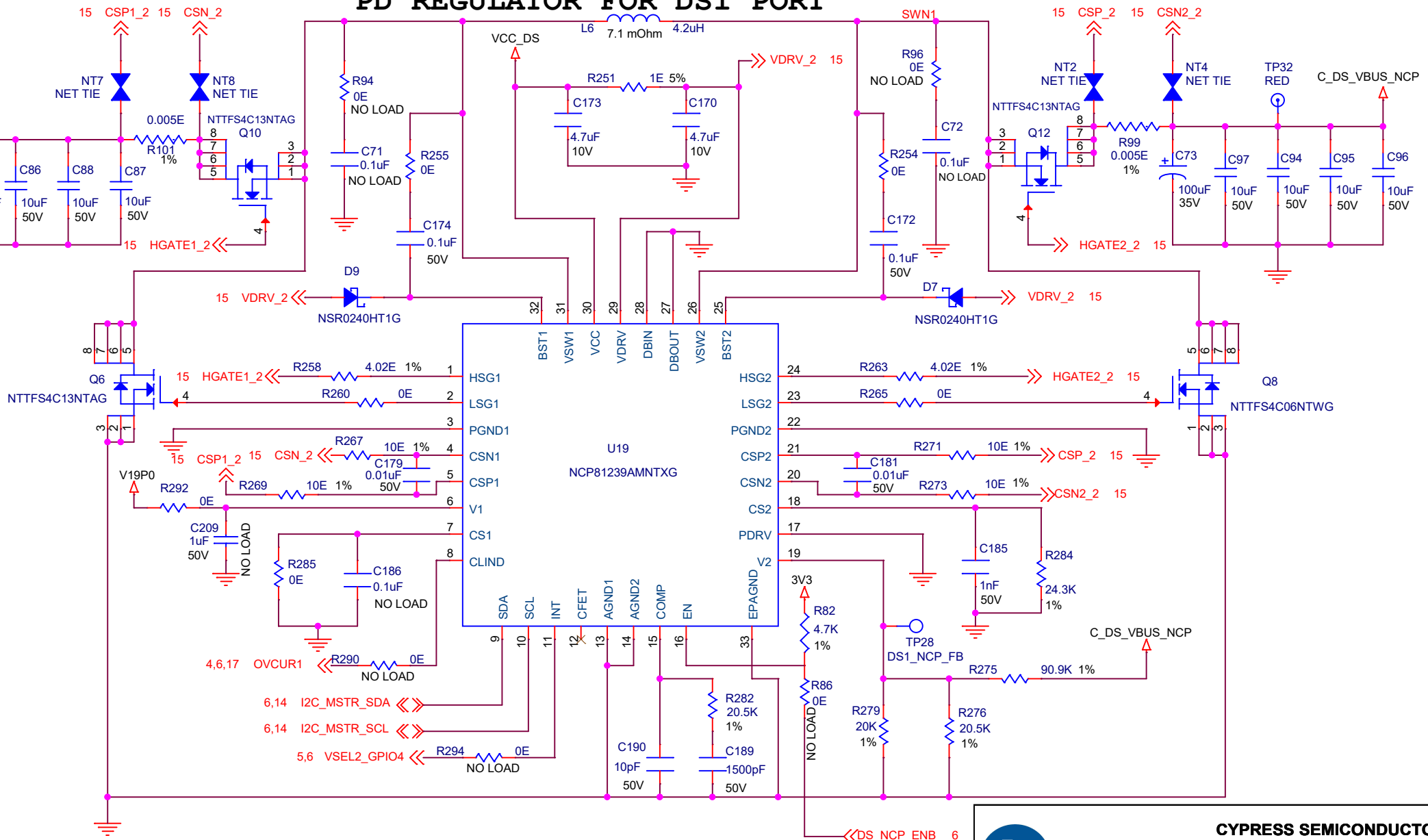

CYPRESS SEMICONDUCTOR
198 CHAMPION COURT
SAN JOSE, CA 95134
(408) 943-2600

CYPRESS SEMICONDUCTOR © 2020

SCH Title : CY6611 EZ-USB HX3PD EVK

Page Title : NCP for DS1_TYPE-C

Size	Document Number	Drawn By	Approved By	Rev
A4	630-60512-01	PRVE	HITS	05

Date: Monday, June 01, 2020 Sheet 15 of 19

DISCHARGE & OVERCURRENT CIRCUIT FOR US PORT

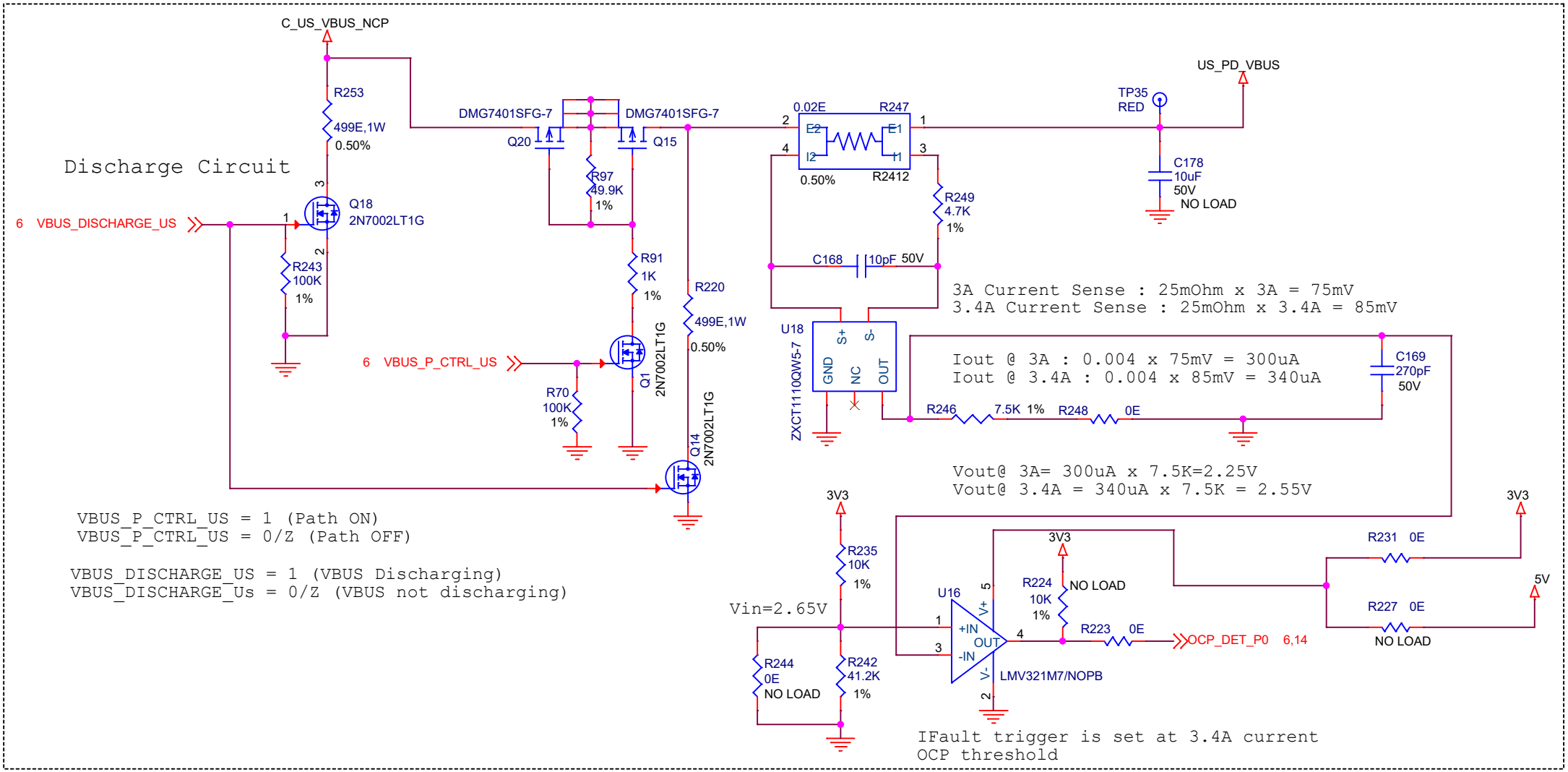

CYPRESS SEMICONDUCTOR
198 CHAMPION COURT
SAN JOSE, CA 95134
(408) 943-2600

CYPRESS SEMICONDUCTOR © 2020

SCH Title : CY6611 EZ-USB HX3PD EVK				
Page Title : UPSTREAM OCP CIRCUIT				
Size	Document Number	Drawn By	Approved By	Rev
A4	630-60512-01	PRVE	HITS	05
Date: Monday, May 18, 2020		Sheet 16 of 19		

DISCHARGE & OVERCURRENT CIRCUIT FOR DS1 PORT

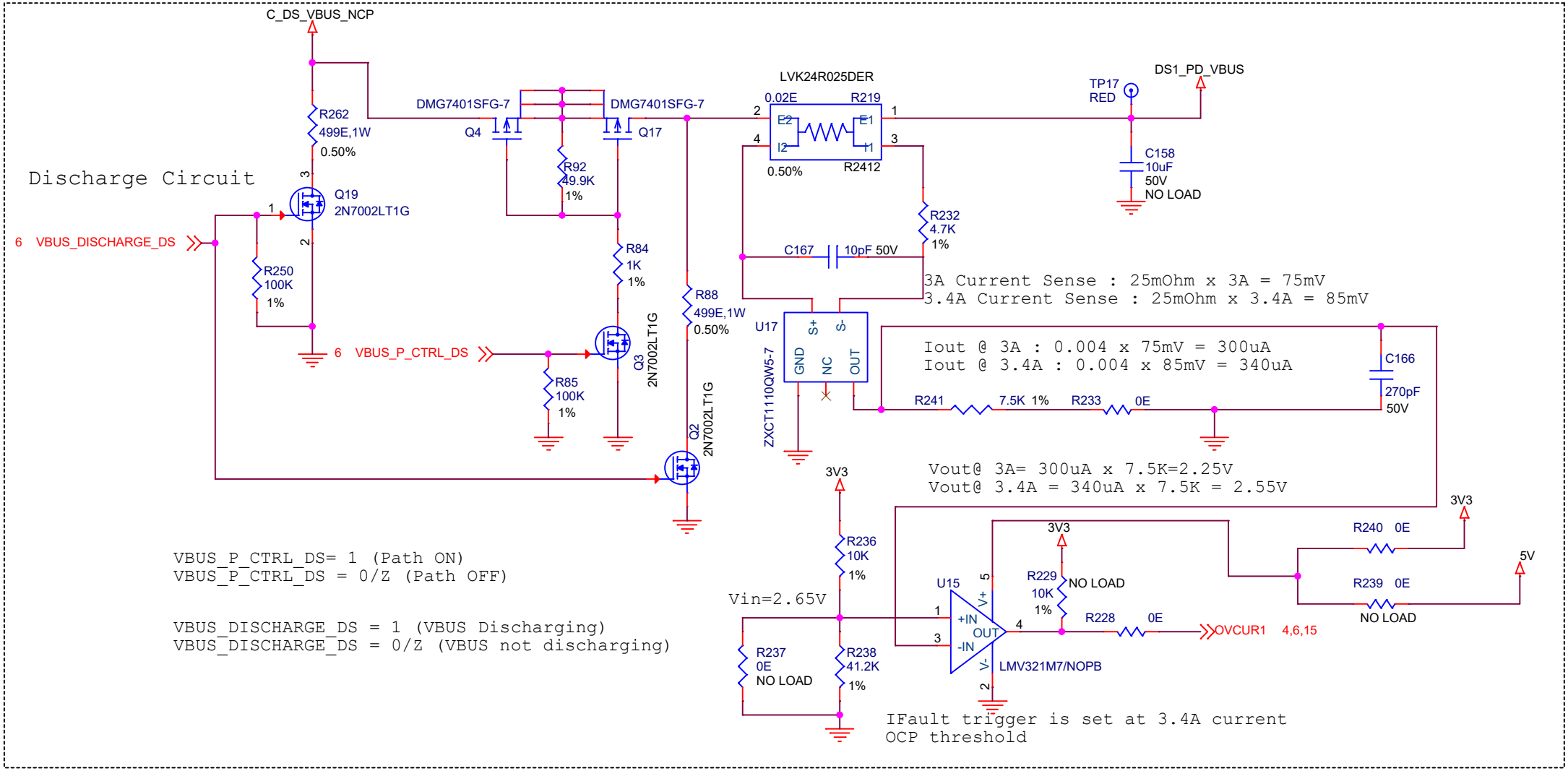

CYPRESS SEMICONDUCTOR
198 CHAMPION COURT
SAN JOSE, CA 95134
(408) 943-2600

CYPRESS SEMICONDUCTOR © 2020

SCH Title :	CY6611 EZ-USB HX3PD EVK
Page Title :	DOWNSTREAM OCP CIRCUIT

Size	Document Number	Drawn By	Approved By	Rev
A4	630-60512-01	PRVE	HITS	05

Date: Monday, May 18, 2020 Sheet 17 of 19

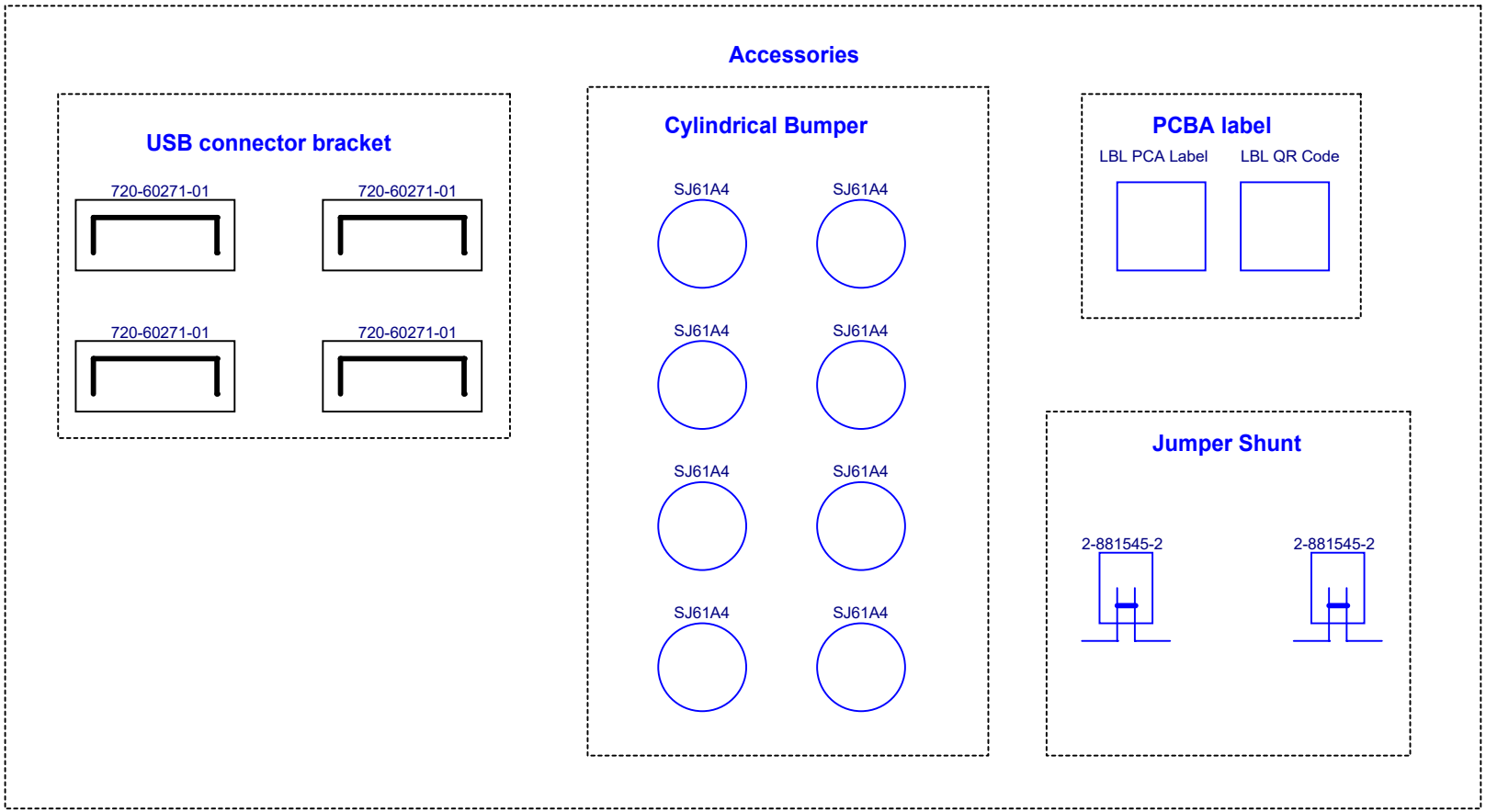

CYPRESS SEMICONDUCTOR
198 CHAMPION COURT
SAN JOSE, CA 95134
(408) 943-2600

CYPRESS SEMICONDUCTOR © 2020

SCH Title : CY6611 EZ-USB HX3PD EVK

Page Title : ACCESSORIES

Size	Document Number	Drawn By	Approved By	Rev
A4	630-60512-01	PRVE	HITS	05

Date: Monday, May 18, 2020 Sheet 18 of 19

Change List

REV01	Initial Release

REVISION HISTORY

REV	DESCRIPTION OF CHANGES	DATE
01	INITIAL RELEASE	2018/08/09
02	CYUSB4357 CHANGED TO CYUSB4347	2018/05/23
03	1. BLOCK DIAGRAM UPDATED & SCHEMATIC FORMATTED AS PER CYPRESS FORMAT 2. PWREN1 is connected to C8 of PD Controller.	2018/12/12
04	CHANGES UPDATED AS PER "CYUSB4347-BZXC"RECENT DATASHEET	2019/07/29
05	1. VDDD_DMC and VDDD_PD pin name are chnaged as per the latest datsheet. 2. VCONN_MONN_P1 net name changed to PWREN1	2020/05/15

CYPRESS SEMICONDUCTOR
198 CHAMPION COURT
SAN JOSE, CA 95134
(408) 943-2600

CYPRESS SEMICONDUCTOR © 2020

SCH Title : CY6611 EZ-USB HX3PD EVK

Page Title : REVISION HISTORY

Size	Document Number	Drawn By	Approved By	Rev
A4	630-60512-01	PRVE	PRVE	05

Date: Monday, May 18, 2020 Sheet 19 of 19